BRAKE CONTROLS

Front Brakes

The front brakes are operated by squeezing the front brake lever, near the right handgrip.

Rear Brake

The rear brake is operated either by depressing the brake pedal or by squeezing the rear brake lever (Fig. 2-18).

NOTE:

Although the front and rear brakes have separate controls, your FOURTRAX's four-wheel drive interconnects all four wheels. So operating any brake control will cause braking at both the front and rear wheels. For information on how to apply the brakes in various riding situations, see pages 64–81.

Parking Brake

The rear brake lever has a lock which allows it to be used as a parking brake.

To set the parking brake, squeeze the rear brake lever (1) and lock it with the lock lever (2). Always set the parking brake when parking and before starting the engine.
To unlock the parking brake, squeeze the rear brake lever until the lock lever releases.
Using the parking brake in freezing weather may cause the brakes to freeze in the locked position.

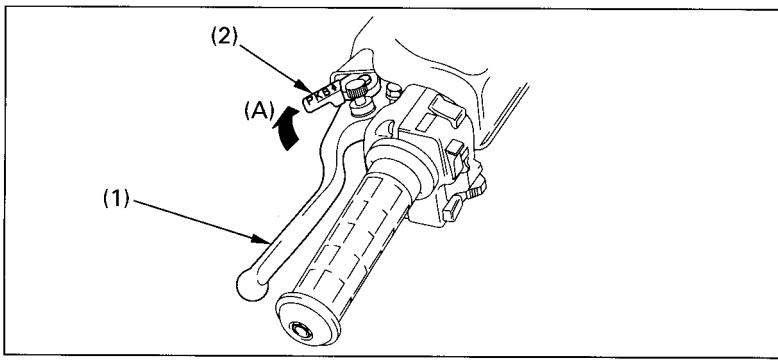

Fig. 2-18 (1) Rear brake lever/ Parking brake lever (2) Lock lever (A) To lock